Product data sheet
Hinged seat R 380 950.51.22590

HEWI

X2D9E

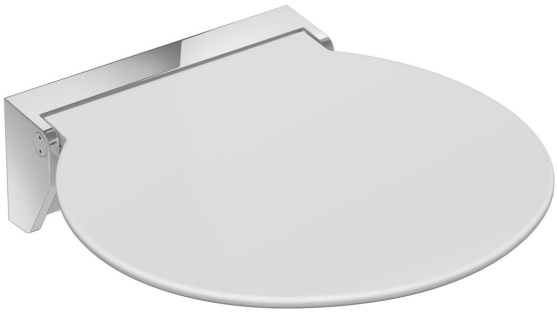

Hinged seat R 380 950.51.22590

- construction consisting of wall bracket and continuous seat
- used for safe sitting in the shower area
- 380 mm wide, 405 mm deep and 107 mm high
- wall bracket made of metal, high-quality chrome-plated
- seat made of glass fibre reinforced polyamide, in the colours white and anthracite grey
- seat can be folded up
- seat depth when folded up: 66 mm
- no struts and fixings visible in folded up state
- combinable with backrest 950.51.02090
- maximum weight capacity 150 kg
- for wall mounting with wall-specific HEWI fixing material

Dimensions in mm

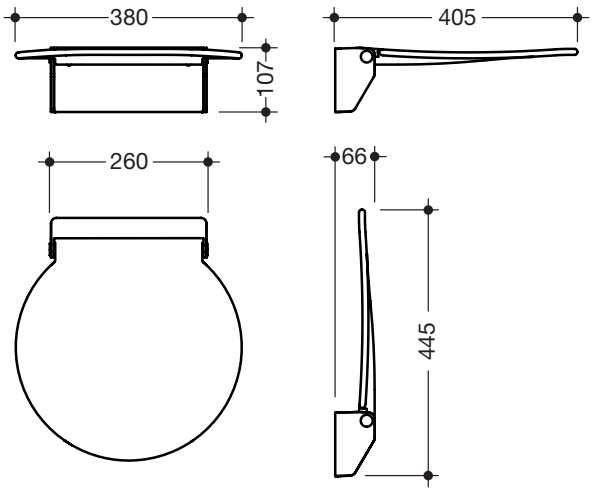

Surface/Colours

chrome	98	92
Wall bracket	Seat	

Alternative surface/colour

white	XA	98	92
Wall bracket		Seat	

Technical information subject to alteration, 08.07.2015

HEWI Heinrich Wilke GmbH
Postfach 1260
D-34442 Bad Arolsen

Telefon: +49 5691 82-366
Telefax: +49 5691 82-99366
international@hewi.com
www.hewi.com

HEWI (UK) Limited
Holm Oak Barn, Beluncle Halt
Stoke Road
Hoo Kent ME3 9NT

Phone +44 1634 258 200
Fax +44 1634 250 099
info@hewi.co.uk
www.hewi.co.uk